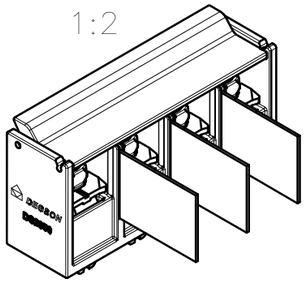

Schematic diagram after assembly;

Note: The clapboards are made of soft material, and they will be bent;

(W/O Cover View)

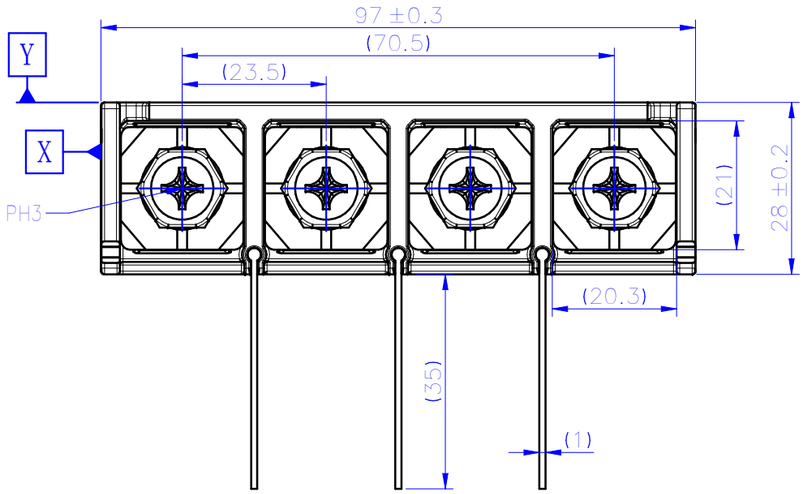

未注公差/General tolerances(mm)														
0 ~ 3	>3 ~ 6	>6 ~ 10	>10 ~ 18	>18 ~ 30	>30 ~ 50	>50 ~ 80	>80 ~ 120	>120 ~ 180	>180 ~ 250	>250 ~ 315	>315 ~ 400	>400 ~ 500	>500	0.1/10
±0.12	±0.18	±0.22	±0.26	±0.31	±0.37	±0.57	±0.80	±0.93	±1.05	±1.15	±1.60	±2.20	±2.50	±2°

A—A

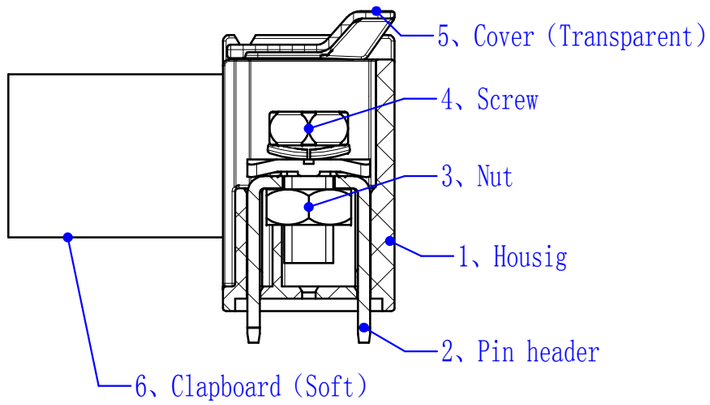

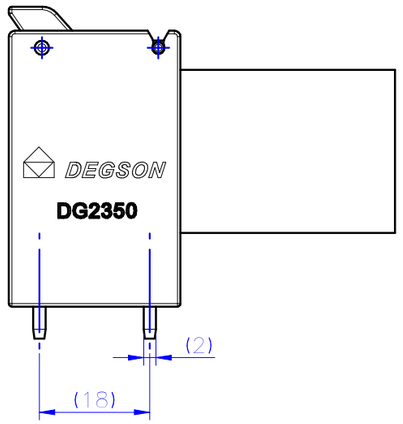

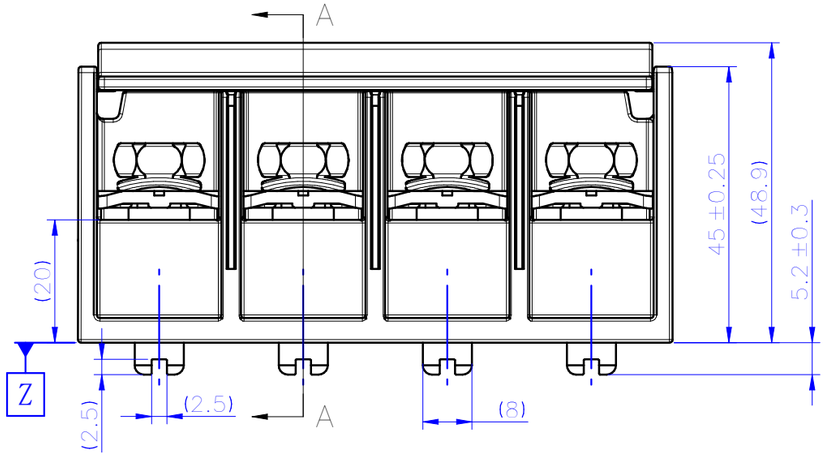

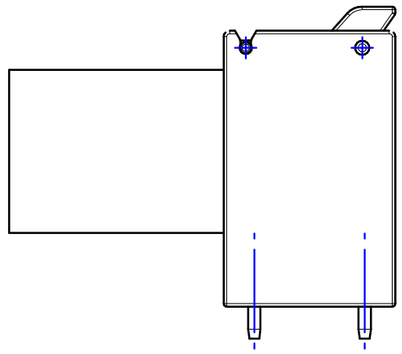

PCB LAYOUT

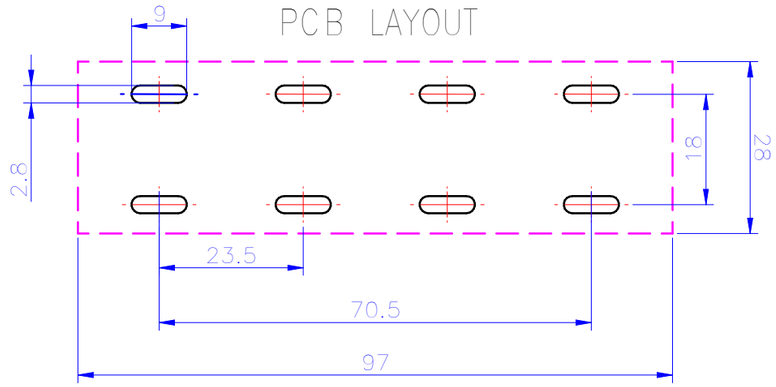

ITEM	NAME OF PART	MATERIAL	NOTES
6	Clapboard	Rubber	/
5	Cover	PC	UL94 V-0
4	Screw	Steel	M8/Zn-Ni Plated
3	Nut	Steel	M8/Zn-Ni Plated
2	Pin header	Copper alloy	Sn Plated
1	Housing	PBT	UL94 V-0

UL 标准/UL Standard:	B	C	D
额定电压/电流/Rated Voltage/Current	600V/120A	600V/120A	600/5A
IEC 标准/IEC Standard:			
过压类别/Overvoltage Category/污染等级/Pollution Degree	Ⅲ/3	Ⅲ/2	Ⅱ/2
额定电压/电流/Rated Voltage(V)/Current(A)	750/120	800/120	800/120
额定脉冲电压(KV)/Rate Impulse Voltage(KV)	6	6	4
螺丝扭矩/Torque Tightening(N· m/Lb.in)	额定：M8, 5.5/48.6 极限：>20.0N·M		
线径范围(硬线和软线)/Wire Range(rigid and flexible)	AWG:2~1/0; mm^2:35~50 注：配冷压头；		
间距/Pitch(mm)/线数范围/Poles	23.50/N=04P		
使用温度范围/Operating temperature(°C)	-40~+125		
符合 RoHS 环保要求/Conform to RoHS	Yes		

DEGSON	MATERIAL: 材质	SURFACE/COLOR: 表面处理	
	MAT NO./REV: 物料编码 / 版本	MAT STATUS: 物料状态	
APPD: 核准人	核准日期	NAME	物料名称
CHKD: 审核人	审核日期		
DRFT: 设计人	设计日期	DRAWING NO. 图号	TYPE 图纸类型
A3	mm (inch)	DRAWING STATUS 图纸状态	SCALE 2:1
			SHEET 1/1

图纸版本	ECN	变更描述	设计人	设计日期
REV	ECN	DESCRIPTION	DRFT	DATE

Transfer or duplication of this document as well as the utilization or communication of its contents are prohibited unless explicit authorization is granted. Violations will be liable for compensation. All rights reserved for patent, utility model or designs registrations.
未经书面授权，不得转让、复制、利用、交流本文件的内容，侵犯者将负赔偿责任。本公司保留对涉及发明、实用新型和外观专利的所有权利。