未注公差/General tolerances(mm)														
0 ~ 3	>3 ~ 6	>6 ~ 10	>10 ~ 18	>18 ~ 30	>30 ~ 50	>50 ~ 80	>80 ~ 120	>120 ~ 180	>180 ~ 250	>250 ~ 315	>315 ~ 400	>400 ~ 500	>500	0.1/10
±0.12	±0.18	±0.22	±0.26	±0.31	±0.37	±0.57	±0.80	±0.93	±1.05	±1.15	±1.60	±2.20	±2.50	±2°

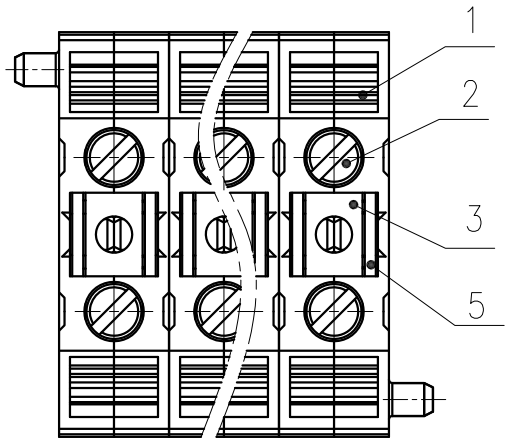

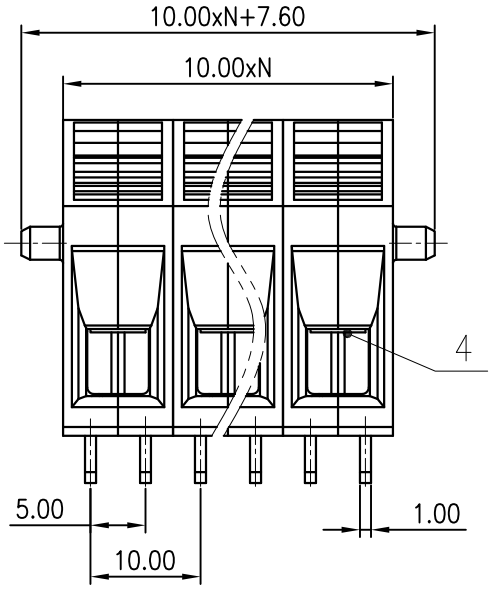

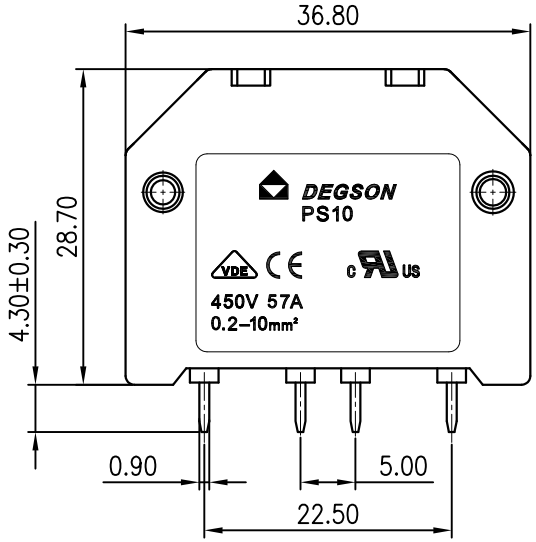

PCB LAYOUT

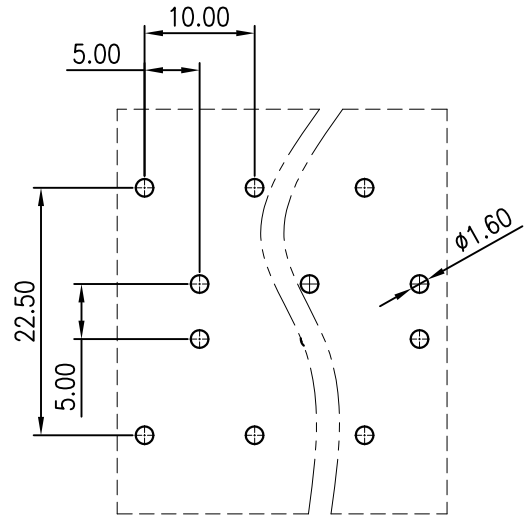

UL 标准/UL Standard:	B	C	D
额定电压/电流/Rated Voltage(V)/Current(A)	600/70	600/70	300/10
EC 标准/IEC Standard:			
额定电压/电流/Rated Voltage(V)/Current(A)	450/57		
工频耐压/Withstanding voltage(V/1Min)	AC2500		
螺丝扭矩/Torque Tightening(N·m/Lb.in)	M4, 1.2/10.62		
线径范围(硬线和软线)/Wire Range(rigid and flexible)(mm²/AWG)	0.2~10/24~6		
间距/Pitch(mm)/线数范围/Poles	10/N=01~12P		
剥线长度/Stripping length(mm)	13~14		
使用温度范围/Operating temperature(°C)	-40~+105		
符合RoHS环保要求/Conform to RoHS	Yes		

ITEM	NAME OF PART	MATERIAL	NOTES
5	Cage	Copper	Sn Plated
4	Pressing line plate	Copper alloy	Ni Plated
3	Current Carrier	Copper alloy	M4/Ni Plated
2	Screw	Copper alloy	M4/Ni Plated
1	Housing	PA66	UL94V-0

REV	ECN	DESCRIPTION	DRFT	DATE

MATERIAL: / SURFACE: /

MAT NO.:

STATUS: /

APPD: Lan ChH 2020.05.25

CHKD: Yu JZh 2020.05.25

DRFT: Li Zh 2020.05.25

DEGSON®

宁波高松电子有限公司
NINGBO DEGSON ELECTRICAL CO., LTD

NAME: PS10-XXP-1Y-10A(H)

DRAWING NO.: 10002153 REV T0

SIZE: A4 mm (inch) TYPE: CUSTOMER DRAWING SCALE: 1.5:1 SHEET 1/1

Transfer or duplication of this document as well as the utilization or communication of its contents are prohibited unless explicit authorization is granted. Violations will be liable for compensation. All rights reserved for patent, utility model or designs registrations. 除非经予明确授权，禁止转让、复制、利用、交流本文件的内容。侵犯者将负赔偿责任。本公司保留对涉及发明、实用新型和外观专利的所有权利。