FOR-1351 Rev.1.0

REVISION RECORD				
REV	ECN	DESCRIPTION	DRFT	DATE

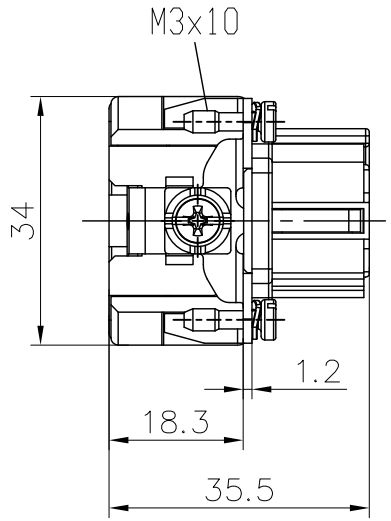

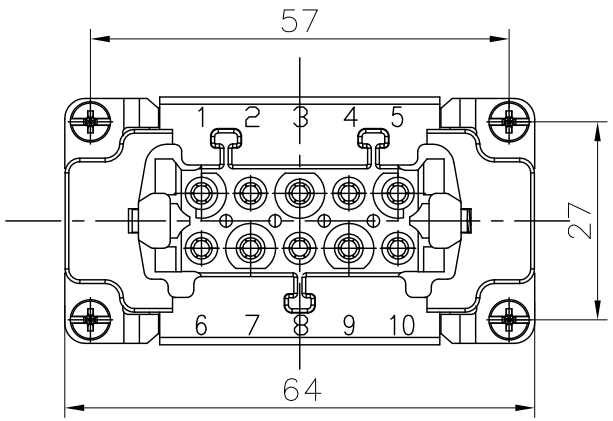

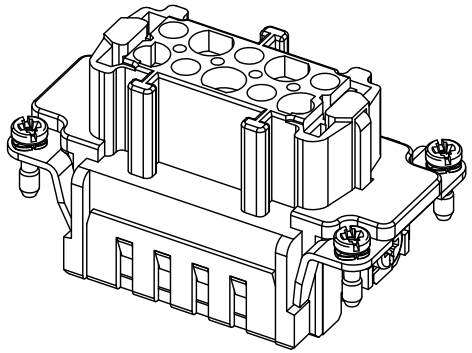

Technical characteristics:

Specifications
DIN EN 60 664-1
DIN EN 61 984

Inserts
01. Number of contacts :10+PE
02. Rated Current :16A
03. Rated Voltage :500V
04. Pollution degree :3
05. Rated impulse voltage :6kv
06. Insulation resistance :≥$10^{10}\Omega$
07. Material:Polycarbonate
08. Rated voltage acc. to UL/CSA:600V
09. Limiting temperatures :-40℃～+125℃
10. Flammability acc. to UL94:V0
11. Mechanical working life (mating cycles) :≥500

Contacts
01. Material:Copper alloy
02. Surface:hard-silver plated
03. Contact resistance :≤3mΩ
04. Terminal :Cage-clamp
05. Wire gauge :0.2-2.5mm² (AWG 26-14)
06. Stripping length :7-9mm
07. Rohs Compliance

DETACHED LISTS	PART NO.: /	DEGSON® 宁波高松电子有限公司 NINGBO DEGSON ELECTRICAL CO., LTD	
	APPD:	NAME: DE-010-FS	
	CHKD:		
	DRFT: Mr.Yang 2016.08.08	TITLE: CUSTOMER DRAWING	REV: D0
	THIRD ANGLE PROJECTION	DRAWING NO.: /	SHEET: 1/1
		MM (INCH) DO NOT SCALE DRAWING	SCALE: 1:1