FOR-1754 Rev.2.0

未注公差/General tolerances(mm)														
0 ~ 3	>3 ~ 6	>6 ~ 10	>10 ~ 18	>18 ~ 30	>30 ~ 50	>50 ~ 80	>80 ~ 120	>120 ~ 180	>180 ~ 250	>250 ~ 315	>315 ~ 400	>400 ~ 500	>500	0.1/10
±0.12	±0.18	±0.22	±0.26	±0.31	±0.37	±0.57	±0.80	±0.93	±1.05	±1.15	±1.60	±2.20	±2.50	±2°

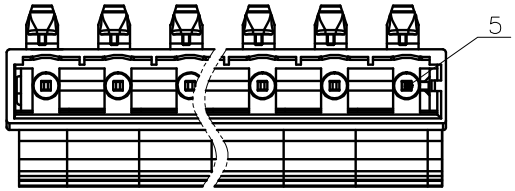

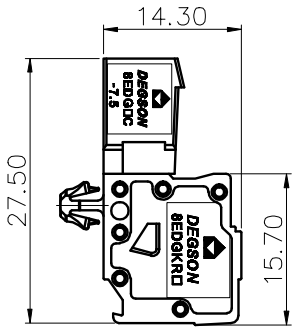

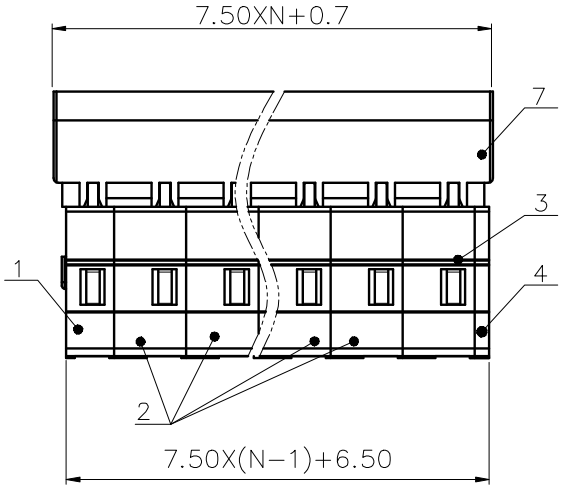

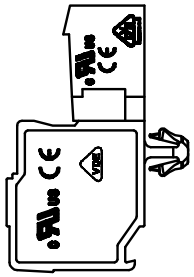

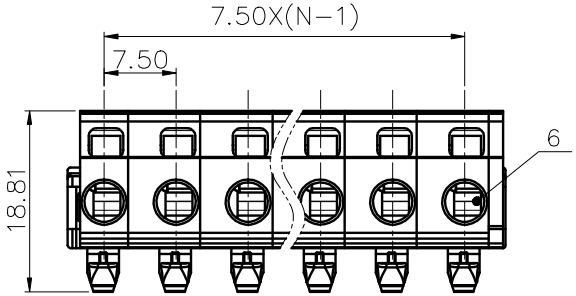

ITEM	NAME OF PART	MATERIAL	NOTES
7	Housing 3	PA66	UL94V-0
6	Spring	Stainless steel	
5	Pin	Copper	Sn Plated
4	Cover	PA66	UL94V-0
3	Housing 2	PA66	UL94V-0
2	Housing 1	PA66	UL94V-0
1	Side Housing	PA66	UL94V-0

UL 标准/UL Standard:	B	C	D
额定电压/电流/Rated Voltage(V)/Current(A)	300/15	/	300/10
IEC 标准/IEC Standard:			
过压类别/Overvoltage Category/污染等级/Pollution Degree	Ⅲ/3	Ⅲ/2	Ⅱ/2
额定电压/电流/Rated Voltage(V)/Current(A)	400/20	/	/
额定脉冲电压(KV)/Rate Impulse Voltage(KV)	4	/	/
线径范围(硬线和软线)/Wire Range(rigid and flexible)(mm^2/AWG)	0.2~2.5/22~14		
间距/Pitch(mm)/线数范围/Poles	7.50/N=02~12P		
剥线长度/Stripping length(mm)	9-10		
使用温度范围/Operating temperature(°C)	-40~+105		
符合RoHS环保要求/Conform to RoHS	Yes		
标准颜色编号/Standard color number: PANTONE	7534U		

REV	ECN	DESCRIPTION	DRFT	DATE

MATERIAL: / SURFACE: /

MAT NO.: /

STATUS: /

APPD:

CHKD:

DRFT: CenX 2020.06.15

SIZE: A4 mm (inch)

DEGSON® 宁波高松电子有限公司 NINGBO DEGSON ELECTRICAL CO., LTD

NAME: 8EDGKRC-7.5-XXP-11-01A(H)

DRAWING NO.: 8EDGKRC-7.5-C02 REV T0

TYPE: CUSTOMER DRAWING SCALE: 2:1 SHEET 1/1