FOR-1754 Rev.1.1

未注公差/General tolerances(mm)														
0 ~ 3	>3 ~ 6	>6 ~ 10	>10 ~ 18	>18 ~ 30	>30 ~ 50	>50 ~ 80	>80 ~ 120	>120 ~ 180	>180 ~ 250	>250 ~ 315	>315 ~ 400	>400 ~ 500	>500	0.1/10
±0.12	±0.18	±0.22	±0.26	±0.31	±0.37	±0.57	±0.80	±0.93	±1.05	±1.15	±1.60	±2.20	±2.50	±2°

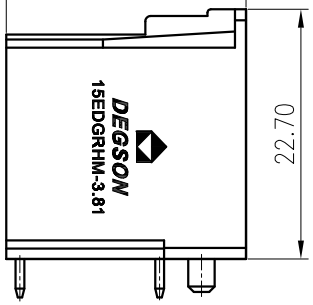

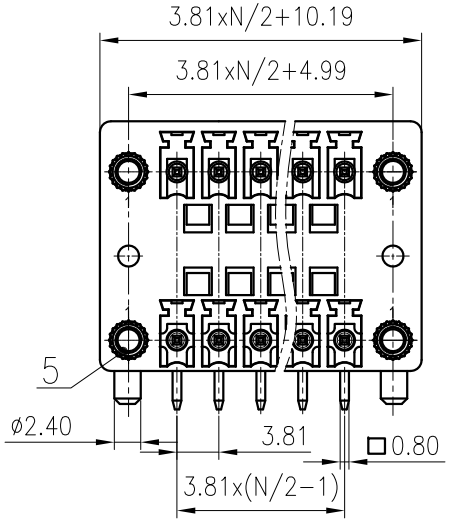

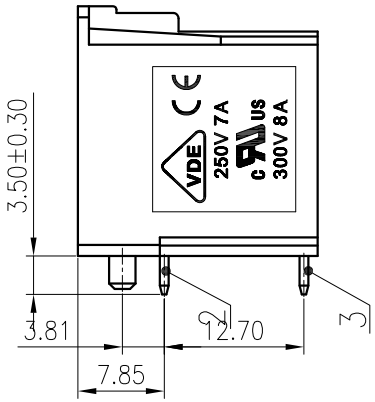

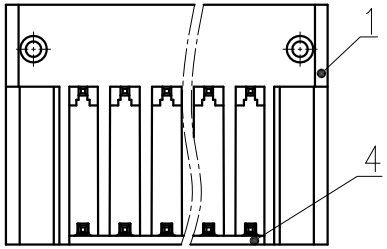

PCB LAYOUT

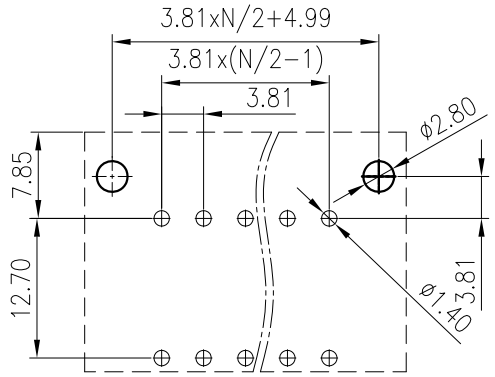

ITEM	NAME OF PART	MATERIAL	NOTES
5	Nut	Copper Alloy	M2.5
4	Cover	PA66	UL94V-0
3	Pin 2	Copper Alloy	Sn Plated
2	Pin 1	Copper Alloy	Sn Plated
1	Housing	PA66	UL94V-0

UL 标准/UL Standard:	B
额定电压/电流/Rated Voltage(V)/Current(A)	300/8
EC 标准/IEC Standard:	
过压类别/Overvoltage Category/污染等级/Pollution Degree	II/2
额定电压/电流/Rated Voltage(V)/Current(A)	250/7
额定脉冲电压(KV)/Rate Impulse Voltage(KV)	2.5
间距/Pitch(mm)/线数范围/Poles	3.81/N=04~48P
使用温度范围/Operating temperature(°C)	-40~+105
符合RoHS环保要求/Conform to RoHS	Yes

MATERIAL:	SURFACE:
MAT NO.: /	DEGSON® 宁波高松电子有限公司 NINGBO DEGSON ELECTRICAL CO., LTD
STATUS: /	
APPD: Lan ChH 2020.05.25	NAME: 15EDGRHM-3.81-XXP-1Y-00A(H)
CHKD: Yu JZh 2020.05.25	
DRFT: ZL 2015.11.13	DRAWING NO.: 15EDGRHM-3.81-C01 REV T1
SIZE: A4 mm (inch)	TYPE: CUSTOMER DRAWING SCALE: 1.5:1 SHEET 1/1

REV	ECN	DESCRIPTION	DRFT	DATE